BROOKS ACCESS

# Terrex Franna MAC 25
## Articulated Crane

- **Maximum Capacity 25t**
- **Maximum Boom Length 18.4m**
- **Maximum Hook Height 18m**

## KEY FEATURES AND BENEFITS

- 25 tonne at 1.4m radius
- 18m hook height
- Increased rated capacity of up to 30% with SL option
- 14.8 tonne at 3.0m radius
- Single line pull 4.2 tonne
- Easy access to all key maintenance points
- 1.8 tonne at 15.7m radius
- Dynamic LMI (Patent Protected)
- Unique boom head design allows for maximum clearance

# OVERVIEW

The MAC 25 is a mobile articulated crane with a maximum lifting capacity of 25 tonne (27 USt). The MAC 25 offers maximum safety, excellent roadability, intuitive peration and unmatched versatility. Over the years it's design has been tried, tested and proven in a range of diffcult lifting applications and is still a customer favourite today. A superlift (SL) upgrade is also available on the MAC 25 as an additional option. The SL kit works in tandem with the existing MAC 25 counterweight, adding a low slung additional counterweight piece to the rear of the machine, increasing the rated capacity of the machine.

# TECHNICAL DESCRIPTION

| BOOM | |
|---|---|
| Maximum boom length | 18.4 m |
| Maximum hook height | 18 m |
| Boom elevation angle range | -10° / 65° |
| Maximum hook height with jib | 20.5 m |
| Articulation | 40° R / 40° L |
| Machinery hook | 15 tonne |

| WINCH | |
|---|---|
| Maximum line pull | 4.2 tonne |
| Two speed winch | 38m/min 76m/min |
| Hook block | 25 tonne maximum rated capacity |

| ENGINE & TRANSMISSION | |
|---|---|
| Standard engine | Mercedes OM 906 |
| Engine power | 205 kW |
| Engine torque | 1100 Nm |
| Fuel Type | Diesel |
| Fuel Capacity | 440 litre |
| Transmission | Allison 6 speed |
| Transfer case | ZF 2:1 Ratio |

| HYDRAULIC SYSTEM | |
|---|---|
| Axial piston pump | 62cc/rev |
| Maximum pump flow rate | 130 litre/min |
| Maximum working pressure | 250 bar |
| Hydraulic tank capacity | 380 litre |

| CHASSIS | |
|---|---|
| Front Axle | 11,900 kg |
| Rear Axle | 12,000 kg |
| Axle total | 23,900 kg |
| Turning circle | 7.9 m |

| BRAKES & SUSPENSION | |
|---|---|
| Brake System | Air operated drum brakes |
| Suspension | Elliptic springs with hydraulic spring lockouts on front axle |

| VEHICLE PERFORMANCE | |
|---|---|
| Maximum rated travel speed | 80 km/h |
| Gradeability | 45% |

# DIMENSIONS / AREA OF OPERATION

## PLAN VIEW

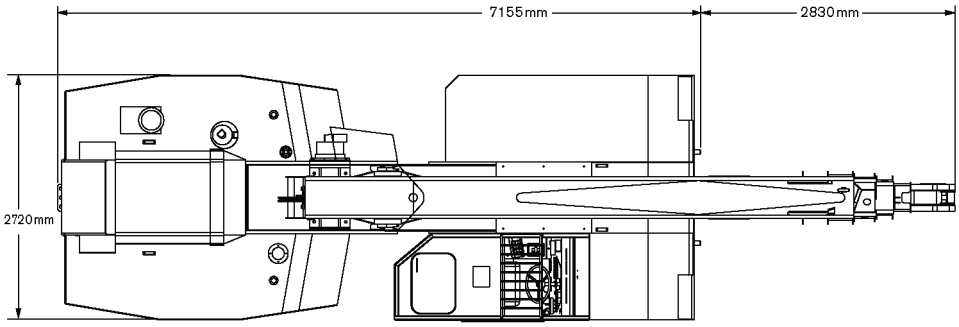


## RIGHT HAND VIEW

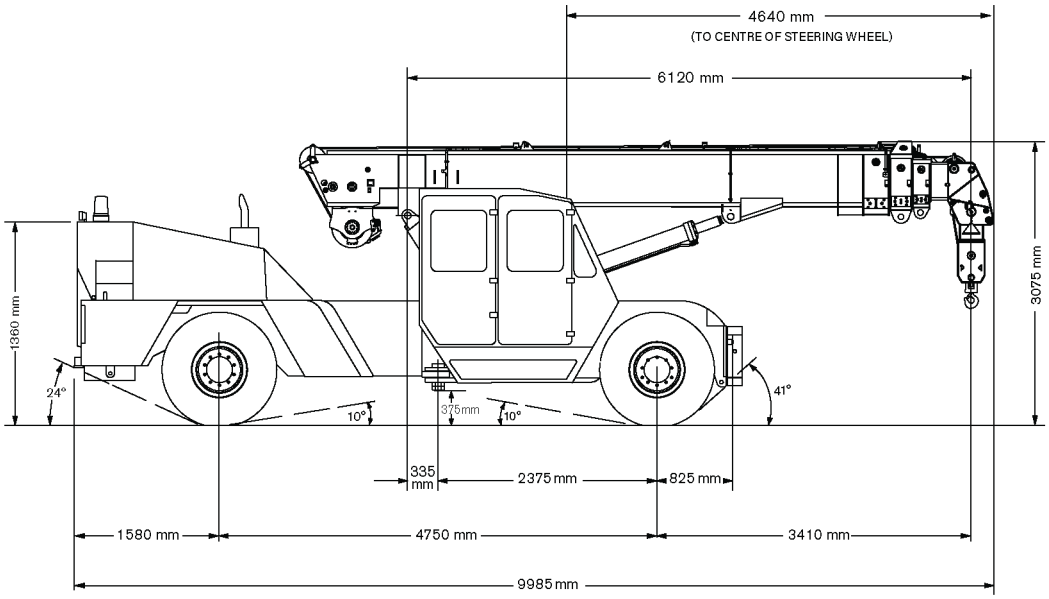


## AREA OF OPERATION

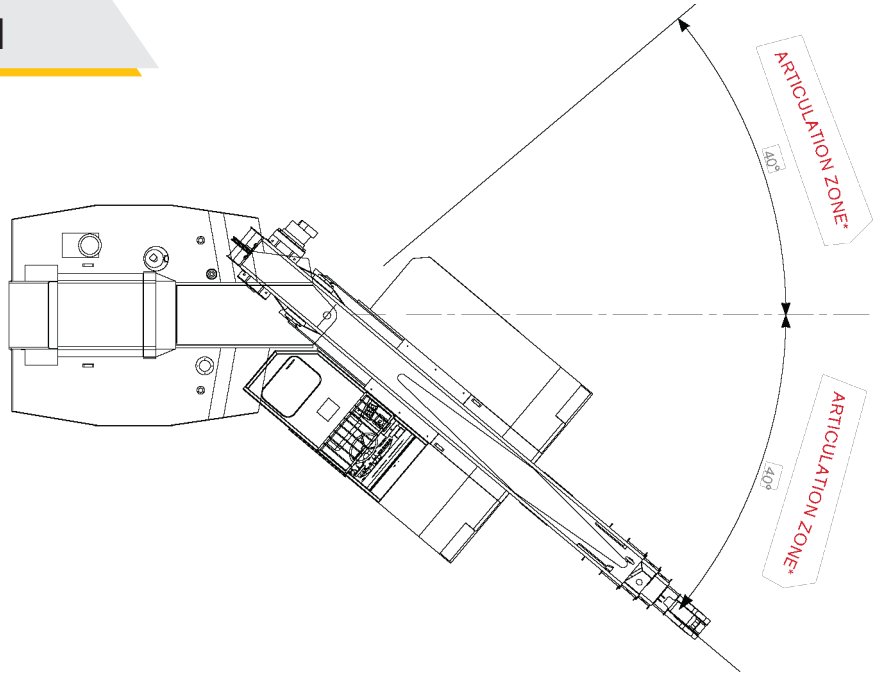

# RADIUS LOAD CHART

Hook will not reach ground when boom head is in the region if the hook block is reeved on 6 parts.

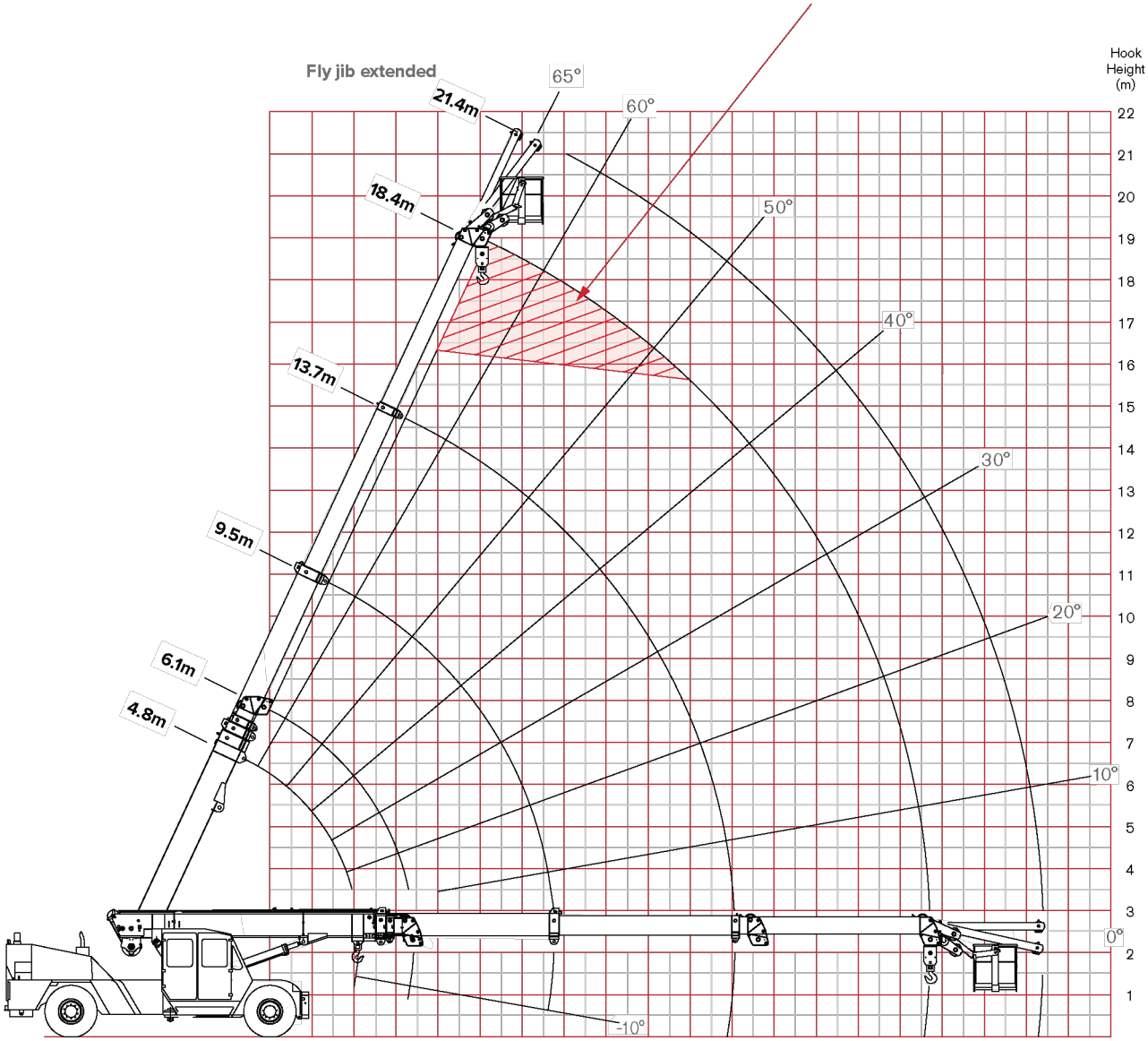


NOTE: Rated Capacity values shown are for the Pick and Carry Chart.

# LOAD CHART

## RATED CAPACITY CHART - FALL BLOCK

| RAD | BOOM LENGTH TO HEAD SHEAVES - 3rd BOOM RETRACTED | | | | | | | | | | | | | 3rd BOOM EXTENDING | | | | RAD |
|---|---|---|---|---|---|---|---|---|---|---|---|---|---|---|---|---|---|---|
| | 6.12 | 6.50 | 7.00 | 7.50 | 8.00 | 8.50 | 9.00 | 9.50 | 10.00 | 11.00 | 12.00 | 13.00 | 14.00 | 15.00 | 16.00 | 17.00 | 18.42 | |
| m | kg | kg | kg | kg | kg | kg | kg | kg | kg | kg | kg | kg | kg | kg | kg | kg | kg | m |
| 1.4 | 25000 | 25000 | 25000 | 25000 | 24500 | 23950 | 23550 | | | | | | | | | | | 1.4 |
| | 24800 | 24800 | 24800 | 24750 | 24550 | 24000 | 23600 | | | | | | | | | | | |
| | 49 | 52 | 56 | 58 | 61 | 63 | 65 | | | | | | | | | | | |
| 2.0 | 22950 | 22950 | 22900 | 22900 | 22850 | 22800 | 22800 | 22750 | 22750 | | | | | | | | | 2.0 |
| | 20550 | 20550 | 20500 | 20450 | 20450 | 20400 | 20350 | 20350 | 20300 | | | | | | | | | |
| | 41 | 45 | 49 | 52 | 55 | 58 | 60 | 62 | 64 | | | | | | | | | |
| 2.5 | 18100 | 18100 | 18050 | 18000 | 18000 | 17950 | 17950 | 17900 | 17900 | 17850 | | | | | | | | 2.5 |
| | 17300 | 17300 | 17250 | 17250 | 17200 | 17200 | 17150 | 17150 | 17150 | 17100 | | | | | | | | |
| | 16150 | 16150 | 16100 | 16100 | 16050 | 16050 | 16000 | 16000 | 15950 | 15100 | | | | | | | | |
| | 33 | 38 | 43 | 47 | 51 | 54 | 56 | 58 | 60 | 64 | | | | | | | | |
| 3.0 | 14800 | 14800 | 14800 | 14800 | 14750 | 14750 | 14700 | 14700 | 14700 | 14650 | 14550 | | | | | | | 3.0 |
| | 14200 | 14150 | 14150 | 14150 | 14100 | 14100 | 14050 | 14050 | 14050 | 14000 | 13450 | | | | | | | |
| | 13200 | 13200 | 13200 | 13150 | 13150 | 13100 | 13100 | 13100 | 13050 | 12650 | 11450 | | | | | | | |
| | 22 | 30 | 36 | 41 | 46 | 49 | 52 | 54 | 57 | 60 | 64 | | | | | | | |
| 3.5 | 12500 | 12450 | 12450 | 12450 | 12450 | 12400 | 12400 | 12400 | 12350 | 12350 | 12300 | 12300 | | | | | | 3.5 |
| | 11950 | 11900 | 11900 | 11900 | 11900 | 11850 | 11850 | 11850 | 11800 | 11800 | 11750 | 11600 | | | | | | |
| | 11100 | 11100 | 11100 | 11050 | 11050 | 11050 | 11000 | 11000 | 11000 | 10850 | 9900 | 9100 | | | | | | |
| | (3.5) | 19 | 28 | 35 | 40 | 44 | 47 | 50 | 53 | 57 | 61 | 63 | | | | | | |
| 4.0 | | 11100 | 10700 | 10700 | 10700 | 10700 | 10650 | 10650 | 10650 | 10600 | 10600 | 10600 | 10550 | | | | | 4.0 |
| | | 10600 | 10200 | 10200 | 10200 | 10200 | 10200 | 10150 | 10150 | 10150 | 10100 | 10100 | 10100 | | | | | |
| | | 9850 | 9500 | 9500 | 9500 | 9500 | 9450 | 9450 | 9450 | 9400 | 8750 | 8050 | 9400 | | | | | |
| | | (3.9) | 18 | 27 | 34 | 39 | 43 | 46 | 49 | 54 | 58 | 61 | 63 | | | | | |
| 5.0 | | | 9650 | 8500 | 8250 | 8250 | 8250 | 8250 | 8200 | 8200 | 8200 | 8150 | 8150 | 8200 | 8300 | 8400 | | 5.0 |
| | | | 9200 | 8100 | 7850 | 7850 | 7850 | 7850 | 7850 | 7800 | 7800 | 7800 | 7750 | 7850 | 7900 | 7950 | | |
| | | | 8550 | 7500 | 7250 | 7250 | 7250 | 7250 | 7250 | 7250 | 7050 | 6500 | 6100 | 5800 | 5600 | 5400 | | |
| | | | (4.4) | (4.9) | 17 | 26 | 32 | 37 | 40 | 46 | 51 | 55 | 58 | 61 | 63 | 65 | | |
| 6.0 | | | | | 7550 | 6750 | 6600 | 6600 | 6600 | 6600 | 6550 | 6550 | 6550 | 6600 | 6700 | 6750 | 6850 | 6.0 |
| | | | | | 7200 | 6450 | 6250 | 6250 | 6250 | 6250 | 6250 | 6250 | 6200 | 6300 | 6350 | 6450 | 6400 | |
| | | | | | 6650 | 5950 | 5800 | 5800 | 5800 | 5800 | 5750 | 5450 | 5100 | 4850 | 4700 | 4550 | 4400 | |
| | | | | | (5.4) | (5.9) | 16 | 24 | 30 | 38 | 44 | 49 | 53 | 56 | 59 | 61 | 64 | |
| 7.0 | | | | | | | 6100 | 5550 | 5400 | 5400 | 5400 | 5400 | 5400 | 5450 | 5550 | 5600 | 5700 | 7.0 |
| | | | | | | | 5800 | 5250 | 5150 | 5150 | 5150 | 5100 | 5100 | 5150 | 5250 | 5350 | 5400 | |
| | | | | | | | 5350 | 4850 | 4750 | 4750 | 4700 | 4700 | 4350 | 4200 | 4050 | 3950 | 3800 | |
| | | | | | | | (6.4) | (6.9) | 15 | 29 | 37 | 42 | 47 | 51 | 54 | 57 | 60 | |
| | | | | | | | | | 5050 | 4550 | 4550 | 4550 | 4550 | 4600 | 4650 | 4750 | 4800 | 8.0 |
| | | | | | | | | | 4800 | 4300 | 4300 | 4300 | 4300 | 4350 | 4400 | 4500 | 4600 | |
| | | | | | | | | | 4400 | 3950 | 3950 | 3950 | 3850 | 3650 | 3550 | 3450 | 3350 | |
| | | | | | | | | | (7.4) | 14 | 27 | 35 | 41 | 45 | 49 | 52 | 56 | |
| | | | | | | | | | | 4250 | 3850 | 3850 | 3850 | 3900 | 4000 | 4050 | 4150 | 9.0 |
| | | | | | | | | | | 4000 | 3650 | 3650 | 3650 | 3700 | 3750 | 3850 | 3950 | |
| | | | | | | | | | | 3650 | 3300 | 3300 | 3300 | 3250 | 3150 | 3050 | 2950 | |
| | | | | | | | | | | (8.4) | 14 | 26 | 34 | 39 | 44 | 47 | 52 | |
| | | | | | | | | | | | 3600 | 3300 | 3300 | 3350 | 3450 | 3500 | 3600 | 10.0 |
| | | | | | | | | | | | 3400 | 3100 | 3100 | 3150 | 3250 | 3300 | 3400 | |
| | | | | | | | | | | | 3100 | 2800 | 2800 | 2900 | 2850 | 2750 | 2650 | |
| | | | | | | | | | | | (9.4) | 13 | 25 | 33 | 38 | 42 | 47 | |
| | | | | | | | | | | | | 3100 | 2850 | 2900 | 3000 | 3050 | 3150 | 11.0 |
| | | | | | | | | | | | | 2950 | 2700 | 2750 | 2850 | 2900 | 3000 | |
| | | | | | | | | | | | | 2650 | 2400 | 2500 | 2550 | 2500 | 2400 | |
| | | | | | | | | | | | | (10.4) | 13 | 24 | 32 | 37 | 43 | |
| | | | | | | | | | | | | | 2700 | 2550 | 2650 | 2700 | 2800 | 12.0 |
| | | | | | | | | | | | | | 2550 | 2400 | 2450 | 2550 | 2600 | |
| | | | | | | | | | | | | | 2250 | 2150 | 2200 | 2300 | 2200 | |
| | | | | | | | | | | | | | (11.4) | 12 | 24 | 31 | 38 | |
| | | | | | | | | | | | | | | 2400 | 2300 | 2400 | 2450 | 13.0 |
| | | | | | | | | | | | | | | 2250 | 2150 | 2250 | 2300 | |
| | | | | | | | | | | | | | | 2000 | 1950 | 2000 | 2050 | |
| | | | | | | | | | | | | | | (12.4) | 12 | 23 | 32 | |
| | | | | | | | | | | | | | | | 2200 | 2100 | 2200 | 14.0 |
| | | | | | | | | | | | | | | | 1850 | 1750 | 1850 | |
| | | | | | | | | | | | | | | | (13.4) | 12 | 25 | |
| | | | | | | | | | | | | | | | | 2000 | 1950 | 15.0 |
| | | | | | | | | | | | | | | | | 1650 | 1650 | |
| | | | | | | | | | | | | | | | | (14.4) | 17 | |
| | | | | | | | | | | | | | | | | | 1800 | 15.71 |
| | | | | | | | | | | | | | | | | | 1450 | |
| | | | | | | | | | | | | | | | | | (15.8) | |
| | | | | | | | | | | | 12.00 | 13.00 | 14.00 | 15.00 | 16.00 | 17.00 | 18.42 | |

## WINCH RATED CAPACITY

| | |
|---|---|
| SINGLE PART | 4200 |
| TWO PARTS | 8400 |
| FOUR PARTS | 16800 |
| SIX PARTS | 25000 |

## UNITS:

- ANGLES IN DEGREES
- LENGTHS IN METRES
- LOAD IN KILOGRAMS

## KEY:

| | | | | | | |
|---|---|---|---|---|---|---|
| 8250 | RC @ ARTIC: | 0° | PITCH: | -2.3 | ROLL: | -1.0 |
| 7850 | RC @ ARTIC: | 25° | PITCH: | -2.3 | ROLL: | -3.0 |
| 7250 | RC @ ARTIC: | 40° | PITCH: | -2.3 | ROLL: | -3.5 |
| 17 | BOOM ANGLE | | | | | |
| (5.9) | RADIUS AT ZERO BOOM ANGLE | | | | | |

Note: Pitch & Roll angles indicated are representative of lifts based on firm level ground with tyres at specified pressures.

1300 BROOKS (276 657)

sales@brooksaccess.com.au

brooksaccess.com.au

BROOKS
ACCESS